IMEKO 2010 TC3, TC5 and TC22 Conferences
Metrology in Modern Context
November 22–25, 2010, Pattaya, Chonburi, Thailand

DEVELOPING MULTICOMPONENT FORCE TRANSDUCERS AT INRIM

Sergio Desogus [1], *Alessandro Germak* [2], *Fabrizio Mazzoleni* [3], *Danilo Quagliotti* [4], *Giulio Barbato* [5], *Arturo Barbieri* [6], *Giacomo Bigolin* [7], *Carlo Bin* [8]

[1] Istituto Nazionale di Ricerca Metrologica (INRIM), Torino, Italy, S.Desogus@inrim.it
[2] Istituto Nazionale di Ricerca Metrologica (INRIM), Torino, Italy, A.Germak@inrim.it
[3] Istituto Nazionale di Ricerca Metrologica (INRIM), Torino, Italy, F.Mazzoleni@inrim.it
[4] Istituto Nazionale di Ricerca Metrologica (INRIM), Torino, Italy, D.Quagliotti@inrim.it
[5] Polytechnic of Turin, DISPEA, Torino, Italy, giulio.barbato@polito.it
[6] Officine Meccaniche BBM S.p.A., Rossano Veneto (VI), Italy, abarbieri@bbm.it
[7] Officine Meccaniche BBM S.p.A., Rossano Veneto (VI), Italy, gbigolin@bbm.it
[8] Officine Meccaniche BBM S.p.A., Rossano Veneto (VI), Italy, cbin@bbm.it

Abstract – A new type of multi-component dynamometer was developed at INRIM. In the paper the design and the realization of this multicomponent dynamometer, the calibration activity and the metrological characterization will be described.

Keywords: force, multicomponent, calibration.

1. INTRODUCTION

In the field of multicomponent dynamometry, INRIM has developed in recent decades, several measuring and calibration systems that have allowed to acquire considerable experience.

Multicomponent dynamometers developed at INRIM have found application in the metrological characterisation of primary force standard machines (for controlling parasitic components) [1,2] and in other areas such as robotics [3,4] and verification of material testing machines [5,6].

In fact, both the ranges of different dynamometers (from a few newtons to hundreds of kilonewtons) and the type (compound elements or monolithic) permit to cover a broad spectrum of applications.

At the same time, the development of a multicomponent dynamometer needs to perform the calibration that is considerably more complex than a normal calibration of a uniaxial load cell. To carry out this activity is necessary to apply forces and moments on the different axes of multi-component dynamometer and, to assess the correlations, it is necessary to apply them in independent way and/or in combination.

Recently, in collaboration with a company in the field of mechanical tests, at INRIM it has been developed a new type of multi-component dynamometer of 200 kN of capacity of axial force, and up to 30 kN of capacity of radial forces (and the respective moments that can be generated by these forces). This dynamometer has been used as sensor in a testing machine for spring tests.

2. DESCRIPTION OF THE NEW MULTICOMPONENT DYNAMOMETER

The dynamometer has an original design with a 120° symmetry that was never used in this specific field (multicomponent force sensors). It is composed by six arms each composed by an uniaxial dynamometer (AEP of 50 kN capacity) properly decoupled from elastic hinges that eliminate (or almost minimize) any component that may be subject individual dynamometers.

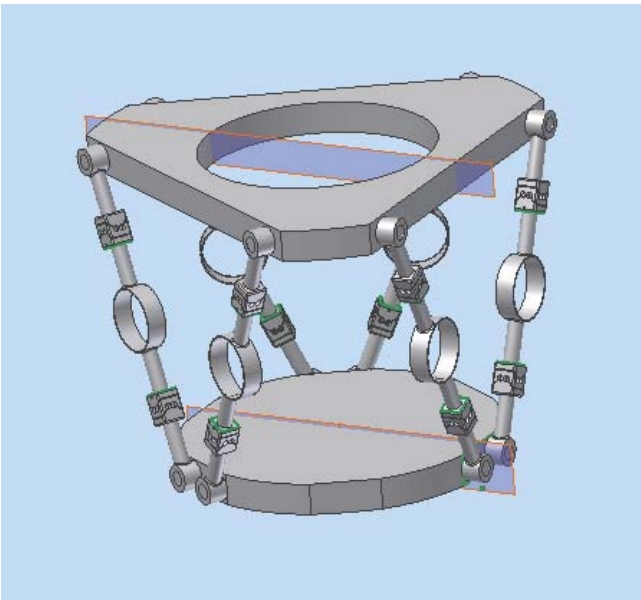

Fig. 1 schematic draw of the 200 kN multicomponent dynamometer

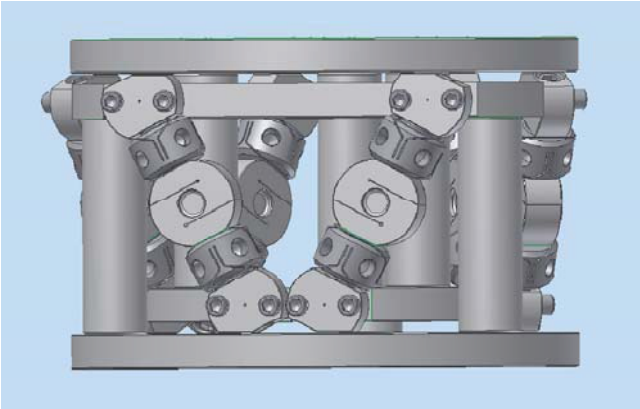

Fig. 2 Front view of the 200 kN multicomponent dynamometer

In this way, the individual dynamometer measures a single component and, by using appropriate equations, it is possible to obtain the values of the three forces on the main axes (F_x, F_y, F_z) and three related moments (M_x, M_y, M_z).

The equations used for the calculation of the six components are the following:

(1)
(2)
(3)
(4)
(5)
(6)

where $O1 \div O6$ are the six outputs from the single dynamometers, α, β, γ are the angles shown in fig. 3 and $\delta = 90\text{-}\gamma$.

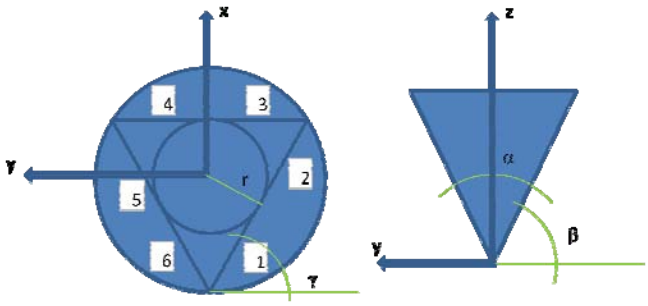

Fig. 3 geometric representation of the 200 kN multicomponent dynamometer

In principle, due to the original design of the dynamometer, it allows the use of the calibration equations of each individual dynamometers without having to take into account, because virtually nil, the interactions between them. This translates into a significant simplification in its use and in the calibration activity.

However, as it is shown in the next chapter, corrections will be applied as result from the calibration activity.

2.1. Calibration

The calibration activity was performed in two steps: the first at INRIM using the Galdabini 1MN dead weights machine (fig. 4). This has been enhanced by simple systems for generating lateral forces (always dead weights) and the second on the testing machine.

In a first stage, the calibration consists mainly for determining the equations of the individual dynamometers; then the theoretical equations of combination of the individual components measured by individual dynamometers have been verified by applying transversal known forces independently and in combination. Finally bending and torques moments were also applied in combination with transverse forces.

Since this calibration has been carried out on an high capacity dead-weight machine, it was only possible to apply combinations of large vertical force (with an expanded uncertainty of $2\text{x}10^{-5}$) with small transversal forces (with an expanded uncertainty of $1\text{x}10^{-2}$).

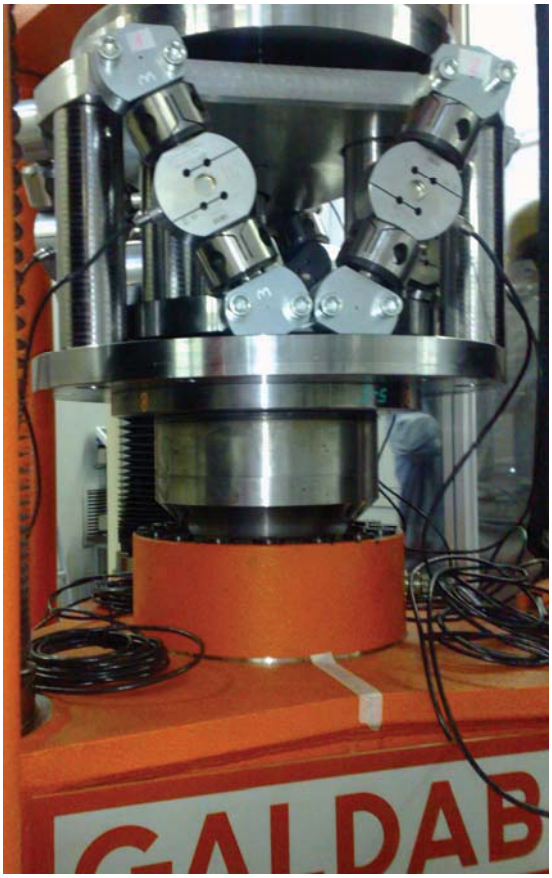

Fig. 4 Calibration set-up on the GALDABINI 1MN dead-weight machine

From the results of this calibration activity, the uncertainty obtained during calibration of the multicomponent dynamometer resulted in class 00 as classification of ISO376 for the main axial component (up to 200kN) with an uncertainty of about 1% in the measurement of transverse force and moments components.

The second calibration activity was carried out directly on the testing machine. In this case the axial force have been generated by masses and the transversal forces have been generated by mean of mechanical mechanisms and measured by mean of a calibrated (class 00) uniaxial dynamometer (fig. 5).

Fig. 5 Calibration set-up on the testing machine

In this calibration it was possible to apply transversal forces up to 10 kN with an axial force up to 58 kN.

Calibration results shown a calibration error in the transversal force measurement between 7,5 % and 8,5% with a good repeatability (<1%). Following, a correction has been evaluated to reduce this error interpolating the errors with a second order polynomial evaluated with the least squared method.

As it is possible to see in fig. 6, the residual error after the application of the correction in included in ±2% and always lower than 100 N.

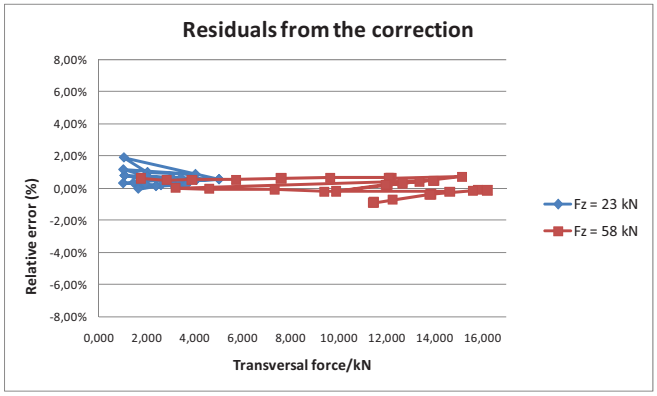

Fig. 6 Calibration results applying the corretion

3. CONCLUSIONS

The development of this new multicomponent dynamometer has allowed to increase the INRIM know-how in the field multicomponent dynamometry. The metrological characterization has shown the goodness of the project and the excellent realization.

The uncertainty in measurement of the transversal forces lower than 100 N related to a capacity of 30 kN is considered a very good result.

A further improvement of the possibilities of calibration using the 1MN dead weigh machine is expected to improve the ability of calibration (expanding the scale of the transverse forces) in order to improve the metrological characterization of multicomponent dynamometers at high capacity.

REFERENCES

[1] Ferrero,C., Bray,A., Levi. R., Marinari,C. "An Investigation on parasitic effects on force standard machines" -In: VDI-Berichte, vol.312, 1978.

[2] Ferrero,C., Marinari,C., Martino,E. "A six-component dynamometer to measure parasitic load components on deadweight force standard machines", Proc: 10° Conf. IMECO TC-3, Kobe, Japan, 1984.

[3] Barbato G, Desogus S, Germak A., Bray A, Franceschini F, Levi R (1992). Field calibration method for multicomponent robotic force/moment transducers. In: Proceedings of the Second International Symposium on Measurement and Control in Robotics (ISMCR '92). Tsukuba, Japan, November 15-19, 1992, Tsukuba, p. 233-238.

[4] Barbato G, Desogus S, Germak A. (1990). Multicomponent force sensors for robotics. In: Proceedings of the First International Symposium on Measurement and Control in Robotics (ISMCR '90). Houston, USA, June 1990, Houston, p. 121-129.

[5] Barbato G, Desogus S, Germak A. (1992). Calibration system for multicomponent force and moment transducers. Experimental Mechanics; p. 341-352.

[6] Barbato G, Bray A, Germak A., Levi R (1986). Calibration and verification of multicomponent dynamometers in the meganewton range. In: Proceedings of 11° International Conference on measurement of force and mass. Amsterdam, Netherlands, 1986, Amsterdam, p. 257-266.